MV-SC3050XC-S

5 MP Color Vision Sensor

Introduction

With built-in high-precision vision algorithms, MV-SC3050XC-S vision sensor can realize counting, existence, measurement, recognition and other functions. It can be easily configured and operated via the SCMVS client software, and it uses RS-232 and Ethernet to output vision tool results and customized results.

Applicable Industry

Consumer electronics, food and pharmaceutical, automobile, etc.

Available Model

- 8 mm focal length: MV-SC3050XC-08M-WBN-S
- 12 mm focal length: MV-SC3050XC-12M-WBN-S
- 16 mm focal length: MV-SC3050XC-16M-WBN-S

Key Features

- Adopts embedded hardware platform to realize high-speed image processing.
- Provides built-in algorithms for high-precision positioning, measurement, and recognition which can be applied in applications such as counting, defect detection, existence, and positioning.
- Adopts multiple IO interfaces for input and output signals.
- Supports viewing the device's status in real time via multi-angle visual indicator, convenient for debugging and maintenance.
- Adopts polarized, diffused, and full-transparent multiple optical lighting with good environmental adaptability.
- Supports RS-232, TCP, UDP, FTP, Modbus, PROFINET, EtherNet/IP and other communication modes.

Specification

Model	MV-SC3050XC-08M-WBN-S	MV-SC3050XC-12M-WBN-S	MV-SC3050XC-16M-WBN-S
Tool			
Vision tool	● Measurement: P2P measurement, P2L measurement, contrast measurement, grayscale size, edge width measurement, width measurement, brightness analysis, L2L angle, color measurement, color size, diameter measurement, line angle ● Existence: Spot existence, edge existence, contour existence, pattern existence, circle existence, line existence, anomaly judge, existence detection ● Count: Spot count, edge count, contour count, pattern count, learning-based count, color count ● Recognition: Multi-object count, code recognition, color contrast, color recognition, category recognition, classification registration, object detection registration, OCR ● Logic: Calculator, If module, logic judge, format output, condition judge, character comparison, combination judge ● Location: Calibration convert, single point alignment, point rectify, point grasp, scale transformation, fixture ● Deep learning: DL classification, DL object detection ● Defect detection: Anomaly detection		
Solution capacity	Supports importing and exporting project, up to 32 projects can be stored		
Communication protocol	RS-232, TCP, UDP, FTP, PROFINET, Modbus, EtherNet/IP, MELSEC/SLMP, FINS, Keyence KV		
Camera			
Sensor type	CMOS, global shutter		
Pixel size	3.45 μm × 3.45 μm		
Sensor size	1/1.45"		
Resolution	2432 × 2048		
Max. frame rate	40 fps		
Gain	0 dB to 15 dB		
Exposure time	6 μs to 1 sec		
Pixel format	RGB 8, Mono 8		
Mono/color	Color		
Electrical feature			
Data interface	Fast Ethernet (100 Mbit/s)		
Digital I/O	17-pin M12 connector provides power and I/O, including opto-isolated input (LINE 0/1/2) × 3, opto-isolated output (LINE 3/4/5) × 3, and RS-232 × 1 Supports triggering device via pressing top trigger button		
Power supply	24 VDC		
Power consumption	Typ. 6.5 W @ 24 VDC		
Mechanical			
Lens mount	M12-mount, mechanical autofocus supported		
Focal length	8 mm	12 mm	16 mm
Lens cap	Polarized + diffuser + full-transparent lens cap		
Light source	White spot light source. Red/blue/IR point light source is optional		
Aiming system	Orange LED		
Indicator	Multi-angle visual indicator		
Dimension	43 mm × 57 mm × 45.9 mm (1.7" × 2.2" × 1.8")		
Weight	Approx. 200 g (0.4 lb.)		

Specification

Model	MV-SC3050XC-08M-WBN-S	MV-SC3050XC-12M-WBN-S	MV-SC3050XC-16M-WBN-S
Ingress protection	IP65		
Temperature	Working temperature: 0 °C to 50 °C (32 °F to 122 °F) Storage temperature: −30 °C to 70 °C (−22 °F to 158 °F)		
Humidity	20% RH to 95% RH (no condensation)		
General			
Client software	SCMVS		
Certification	CE, KC		

Detection Range

Lens focal length	Installation distance	Field of view	Single pixel accuracy
8 mm	25 mm	26.22 mm × 22.08 mm	0.011 mm
	2000 mm	2097.6 mm × 1766.4 mm	0.863 mm
12 mm	60 mm	41.95 mm × 35.33 mm	0.017 mm
	2000 mm	1398.4 mm × 1177.6 mm	0.575 mm
16 mm	100 mm	52.44 mm × 44.16 mm	0.022 mm
	2000 mm	1048.8 mm × 883.2 mm	0.431 mm

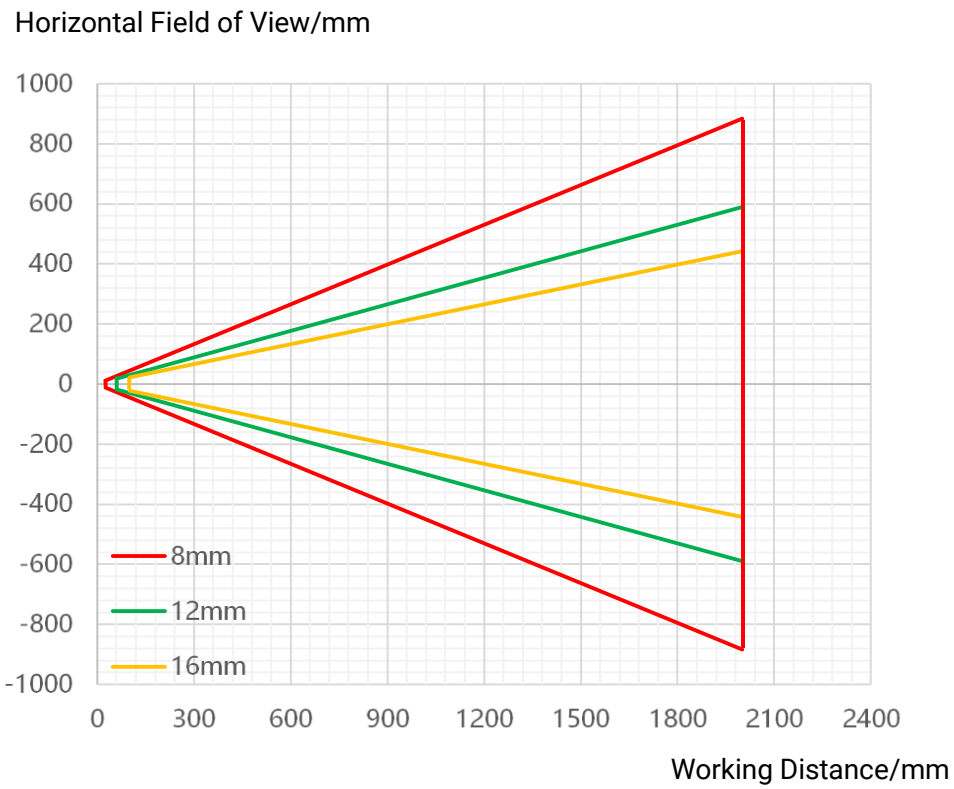

Dimension

Device:

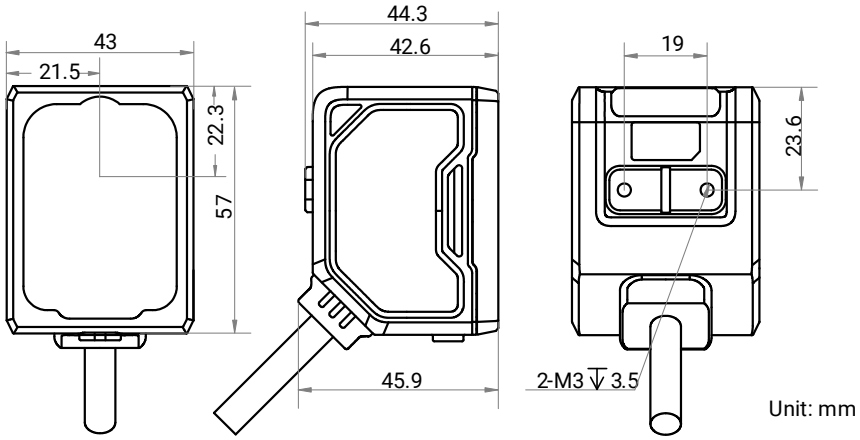

Installation Bracket:

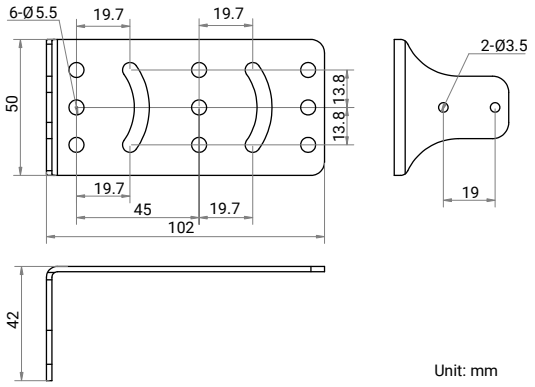

Device and Installation Bracket:

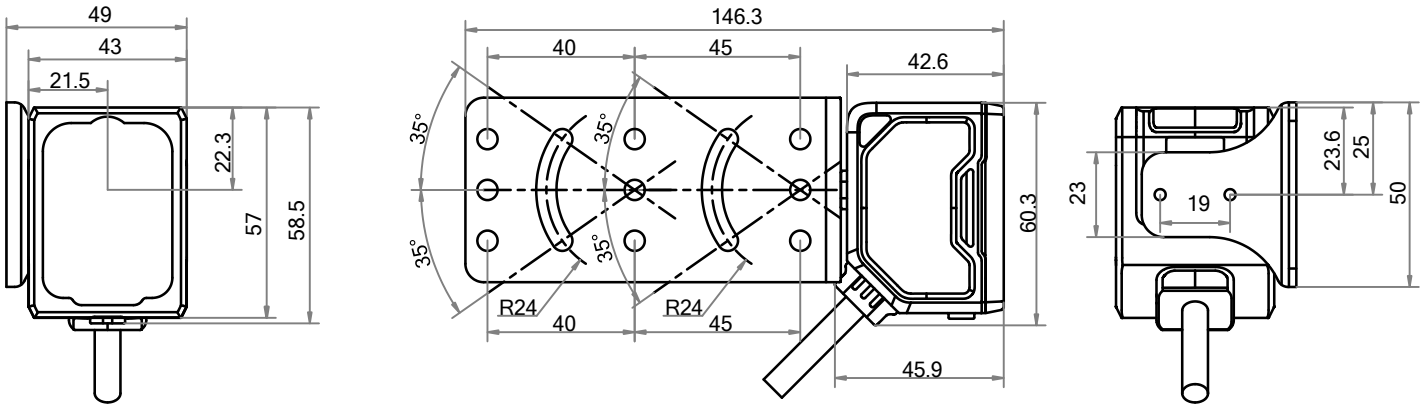

Unit: mm

© Hangzhou Hikrobot Co., Ltd. All Rights Reserved.
Hangzhou Hikrobot does not tolerate any infringement. Any organization or individual may not imitate or reproduce in whole or in part of the content. The data herein is based on Hikrobot's internal evaluation. Actual data may vary depending on specific configuration and operating condition. The information herein is subject to change without notice All the content has been checked conscientiously. Nevertheless, Hikrobot shall not be liable to damages resulting from errors, inconsistencies or omissions.